EXCLUSIVE

2013 / 2014

COLOR

A1 MARS

- Cleaning of glass
- Fresh air connector
- Three points closing
- >79% Efficiency
- 7,9kW Heating power
- 33cm Dimension of wood logs

Black, Serpentino

GREY

Serpentino

Yellow Sandstone

Silver Steel Sides

Vapnenac

BLACK

Granit

Yellow Sandstone

Serpentino

Vapnenac

TECHNICAL DATA

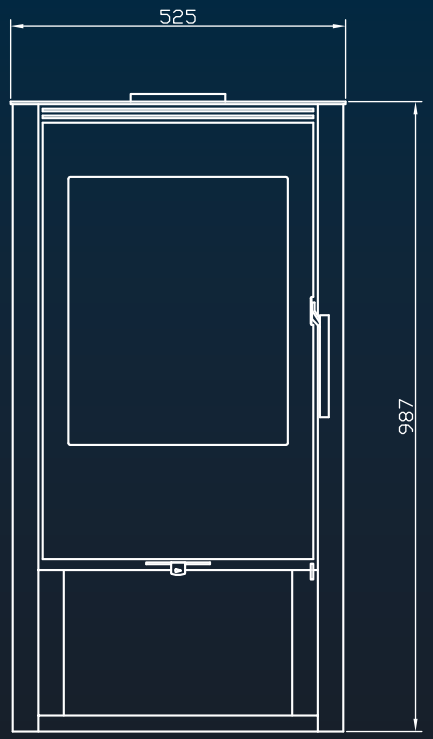

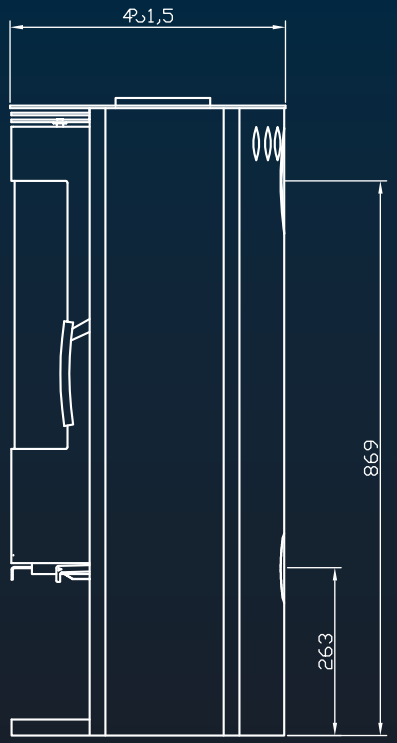

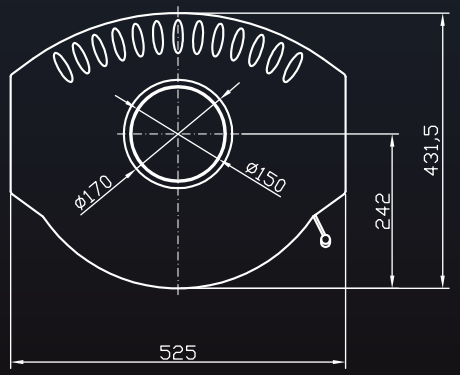

Nominal heating power:	7,9 kw
Room heating capacity:	40-120 m²
Weight:	138 kg
Distance to combustible materials:	Back 200mm/Side 200mm/ Front 1000mm
Efficiency:	79,5%
Fine dust:	< 33 mg/m³
Connection piece for Fresh Air:	intake Ø 100mm
Flue Pipe outlet diameter:	Ø150

A2 SATURN

- Cleaning of glass
- Fresh air connector
- Three points closing
- >79% Efficiency
- 7,9kW Heating power
- 33cm Dimension of wood logs

Grey, Steel Sides

GREY

Serpentino

Yellow Sandstone

Silver Steel Sides

Vapnenac

BLACK

Granit

Yellow Sandstone

Serpentino

Vapnenac

TECHNICAL DATA

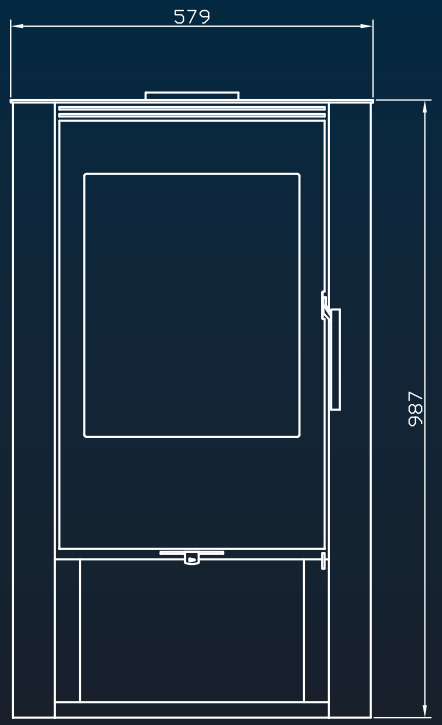

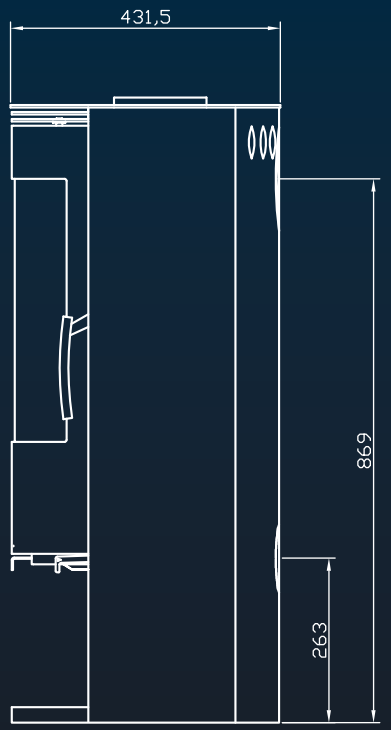

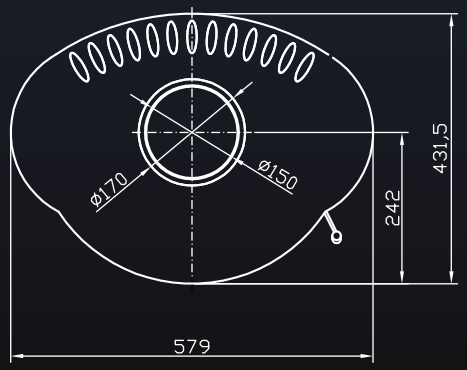

Nominal heating power:	7,9 kw
Room heating capacity:	40-120 m²
Weight:	138 kg
Distance to combustible materials:	Back 200mm/Side 200mm/ Front 1000mm
Efficiency:	79,5%
Fine dust:	< 33 mg/m³
Connection piece for Fresh Air:	intake Ø 100mm
Flue Pipe outlet diameter:	Ø150

A3 ARENA

- Cleaning of glass
- Fresh air connector
- Three points closing
- >77% Efficiency
- 8,4kW Heating power
- 33cm Dimension of wood logs

Grey, Steel Sides

GREY

Serpentino

Yellow Sandstone

Granit

Vapnenac

BLACK

Granit

Yellow Sandstone

Serpentino

Vapnenac

TECHNICAL DATA

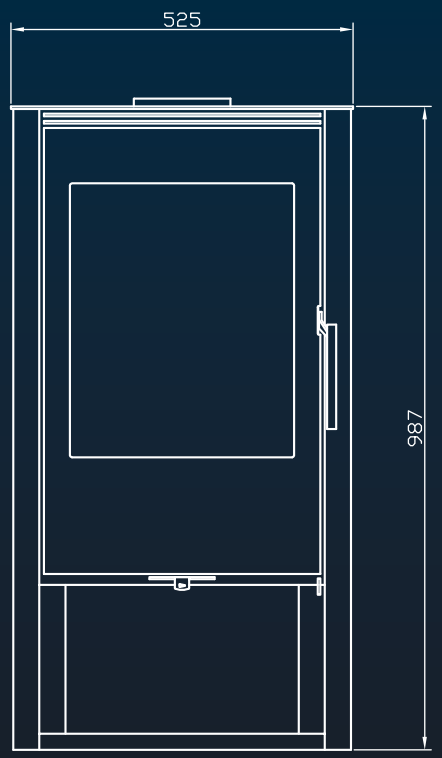

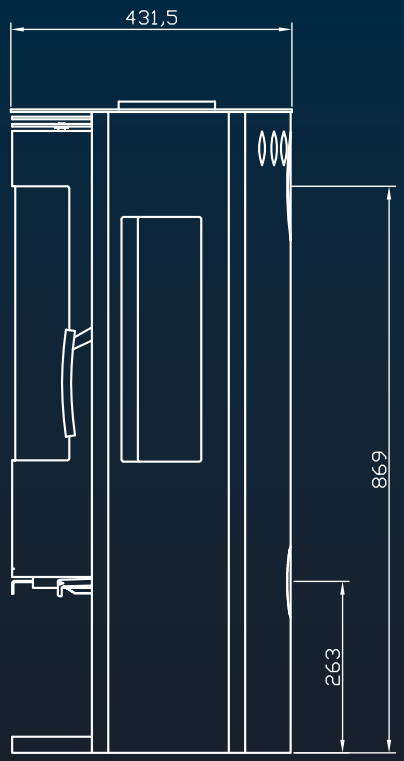

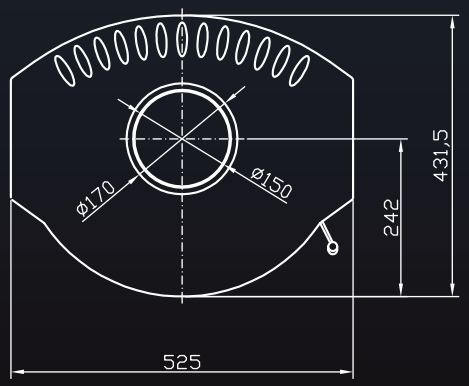

Nominal heating power:	8,4 kw
Room heating capacity:	40-120 m²
Weight:	155 kg
Distance to combustible materials:	Back 350mm/Side 700mm/ Front 1000mm
Efficiency:	77,3%
Fine dust:	< 21 mg/m³
Connection piece for Fresh Air:	intake Ø 100mm
Flue Pipe outlet diameter:	Ø150

A4 GAMA

- Cleaning of glass
- Fresh air connector
- Three points closing
- >79% Efficiency
- 7,9kW Heating power
- 33cm Dimension of wood logs

Black, Serpentino

GREY

Serpentino

Yellow Sandstone

Silver Steel Sides

Vapnenac

BLACK

Granit

Yellow Sandstone

Black Steel Sides

Vapnenac

TECHNICAL DATA

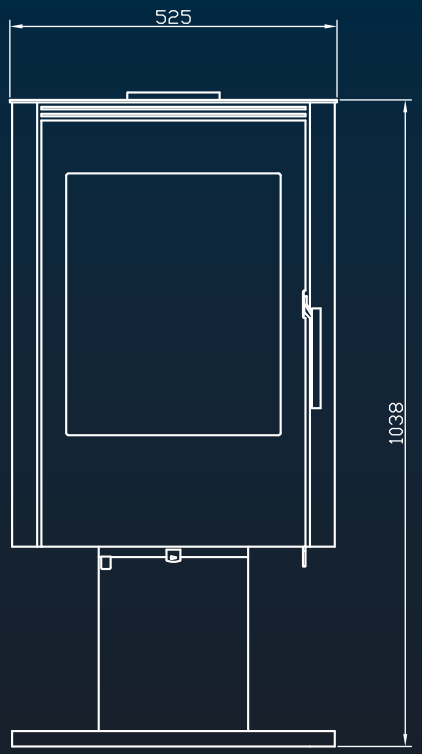

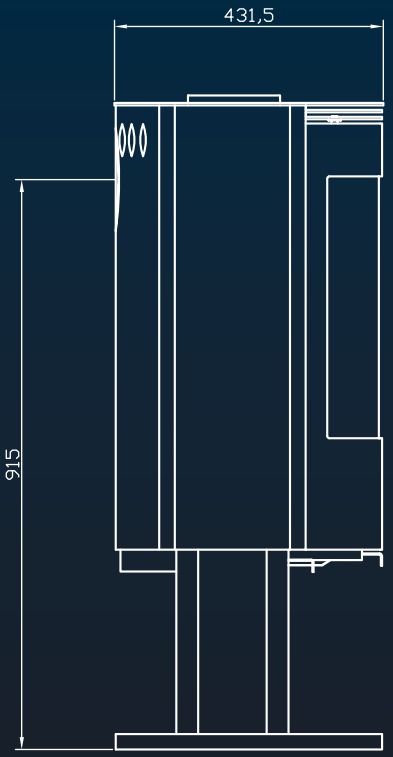

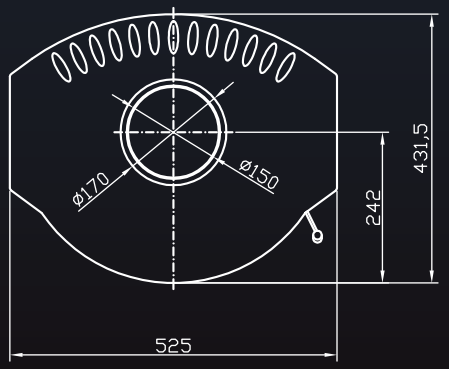

Nominal heating power:	7,9 kw
Room heating capacity:	40-120 m²
Weight:	128 kg
Distance to combustible materials:	Back 200mm/Side 200mm/ Front 1000mm
Efficiency:	79,5%
Fine dust:	< 33 mg/m³
Connection piece for Fresh Air:	intake Ø 100mm
Flue Pipe outlet diameter:	Ø150

A5 VERTIGO

- Cleaning of glass
- Fresh air connector
- Three points closing
- >79% Efficiency
- 7,9kW Heating power
- 33cm Dimension of wood logs

Grey, Serpentino

GREY

Serpentino

Yellow Sandstone

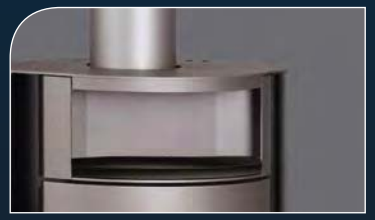
Granit

Vapnenac

BLACK

Granit

Yellow Sandstone

Black Steel Sides

Vapnenac

TECHNICAL DATA

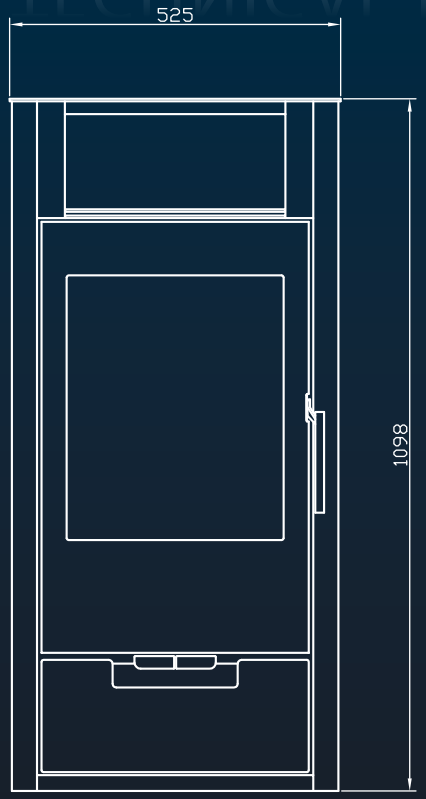

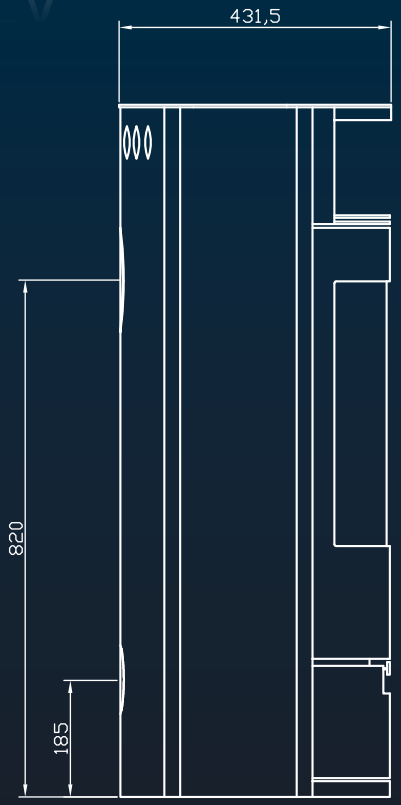

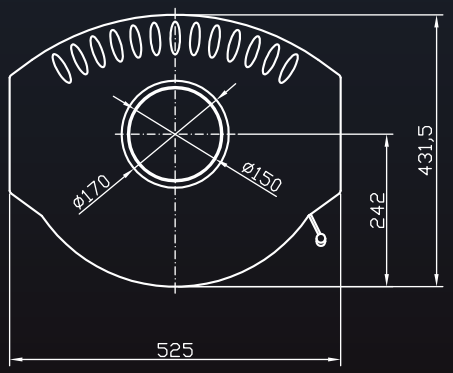

Nominal heating power:	7,9 kw
Room heating capacity:	40-120 m²
Weight:	118 kg
Distance to combustible materials:	Back 200mm/Side 200mm/ Front 1000mm
Efficiency:	79,5%
Fine dust:	< 33 mg/m³
Connection piece for Fresh Air:	intake Ø 100mm
Flue Pipe outlet diameter:	Ø150

B2 Elipse SD

- Cleaning of glass
- Fresh air connector
- Three points closing
- >83% Efficiency
- 7,3kW Heating power
- 33cm Dimension of wood logs

Grey, Serpentino

GREY

Serpentino

Yellow Sandstone

Granit

Vapnenac

BLACK

Serpentino

Yellow Sandstone

Granit

Vapnenac

TECHNICAL DATA

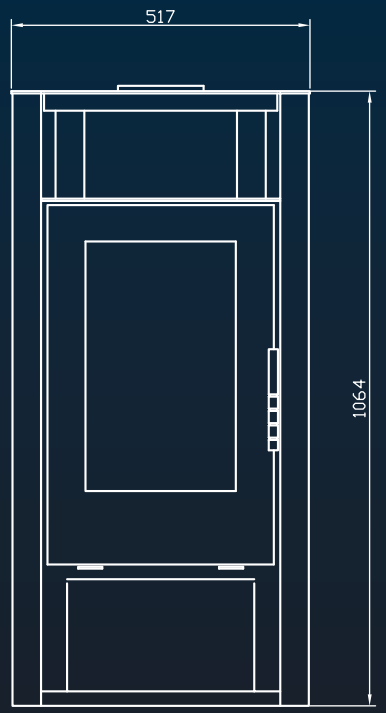

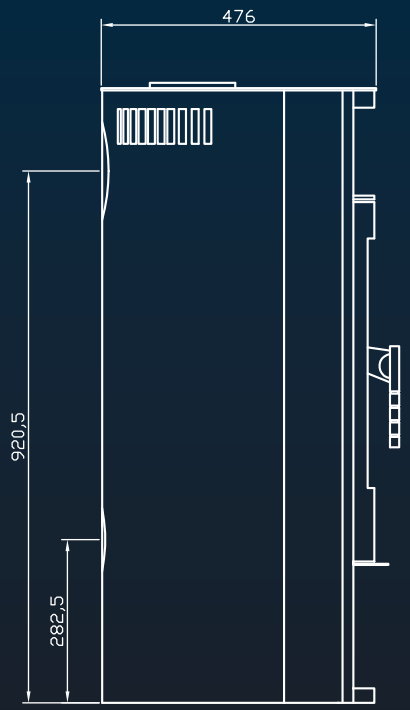

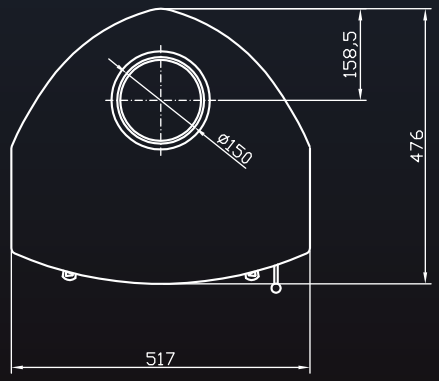

Nominal heating power:	7,3 kw
Room heating capacity:	40-120 m²
Weight:	130 kg
Distance to combustible materials:	Back 250mm/Side 250mm/ Front 1100mm
Efficiency:	83%
Fine dust:	< 20 mg/m³
Connection piece for Fresh Air:	intake Ø 100mm
Flue Pipe outlet diameter:	Ø150

B2 Elipse FG

- Cleaning of glass
- Fresh air connector
- Three points closing
- >83% Efficiency
- 7,3kW Heating power
- 33cm Dimension of wood logs

Black, Yellow Sandstone

GREY

Serpentino

Yellow Sandstone

Granit

Vapnenac

BLACK

Serpentino

Yellow Sandstone

Granit

Vapnenac

TECHNICAL DATA

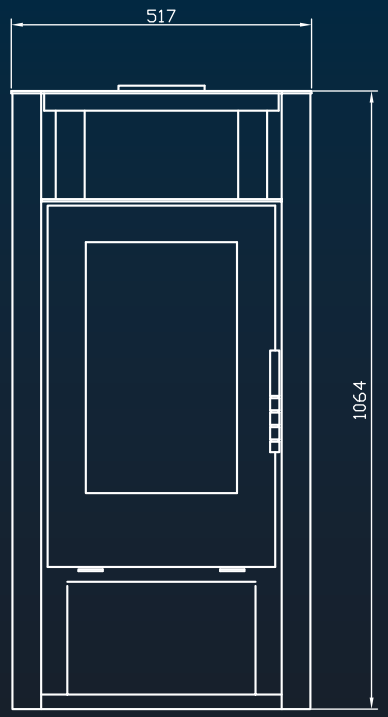

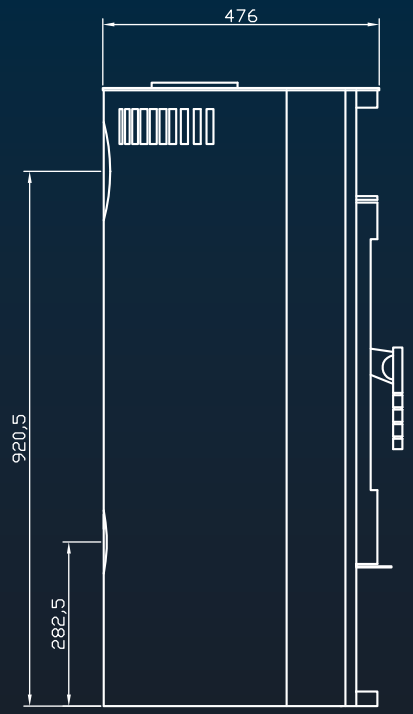

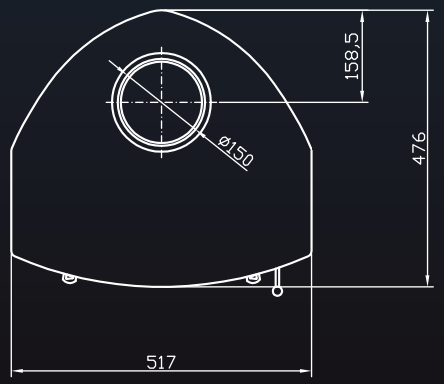

Nominal heating power:	7,3 kw
Room heating capacity:	40-120 m²
Weight:	130 kg
Distance to combustible materials:	Back 250mm/Side 250mm/ Front 1100mm
Efficiency:	83%
Fine dust:	< 20 mg/m³
Connection piece for Fresh Air:	intake Ø 100mm
Flue Pipe outlet diameter:	Ø150

C5 Algo SD

- Cleaning of glass
- Fresh air connector
- Three points closing
- >83% Efficiency
- 6,5kW Heating power
- 33cm Dimension of wood logs

Grey, Serpentino

GREY

Serpentino

Yellow Sandstone

Granit

Vapnenac

BLACK

Serpentino

Yellow Sandstone

Granit

Vapnenac

TECHNICAL DATA

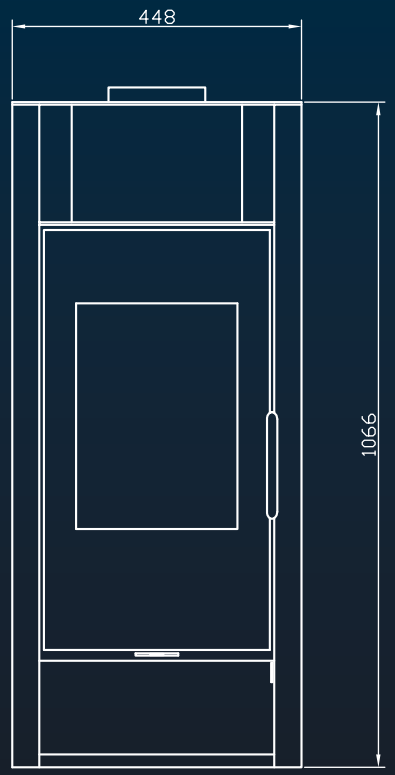

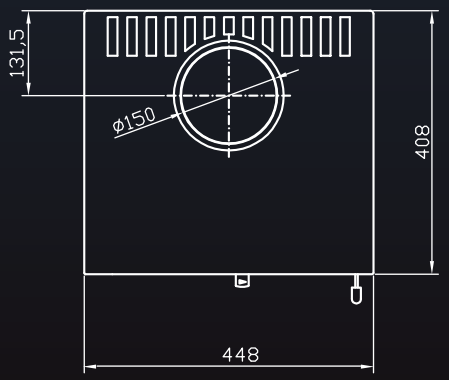

Nominal heating power:	6,5 kw
Room heating capacity:	20-100 m²
Weight:	105 kg
Distance to combustible materials:	Back 350mm/Side 350mm/ Front 1000mm
Efficiency:	83,7%
Fine dust:	< 26 mg/m³
Connection piece for Fresh Air:	intake Ø 100mm
Flue Pipe outlet diameter:	Ø150

C5 Visao FG

- Cleaning of glass
- Fresh air connector
- Three points closing
- >83% Efficiency
- 6,5kW Heating power
- 33cm Dimension of wood logs

Black, Yellow Sandstone

GREY

Serpentino

Yellow Sandstone

Granit

Vapnenac

BLACK

Serpentino

Yellow Sandstone

Granit

Vapnenac

TECHNICAL DATA

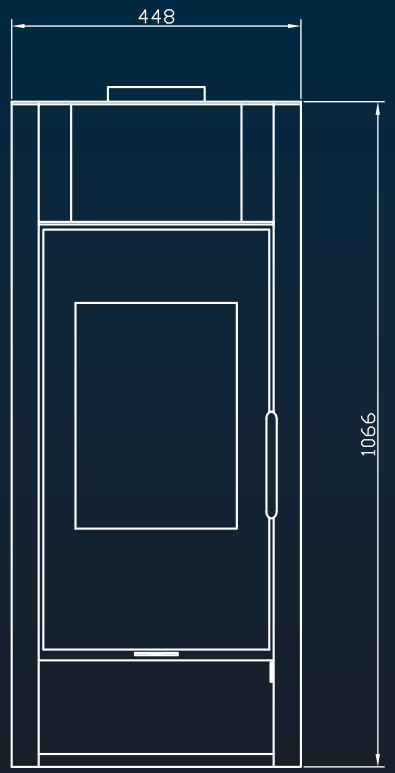

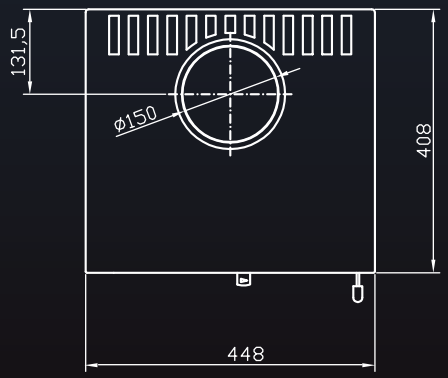

Nominal heating power:	6,5 kw
Room heating capacity:	20-100 m²
Weight:	105 kg
Distance to combustible materials:	Back 350mm/Side 350mm/ Front 1000mm
Efficiency:	83%
Fine dust:	< 26 mg/m³
Connection piece for Fresh Air:	intake Ø 100mm
Flue Pipe outlet diameter:	Ø150

D1 SOLO

- Cleaning of glass
- Fresh air connector
- Three points closing
- >80% Efficiency
- 7,0kW Heating power
- 35cm Dimension of wood logs

Grey, Steel Sides

GREY

Serpentino

Yellow Sandstone

Grey Steel Sides

Vapnenac

BLACK

Granit

Yellow Sandstone

Black Steel Sides

Vapnenac

TECHNICAL DATA

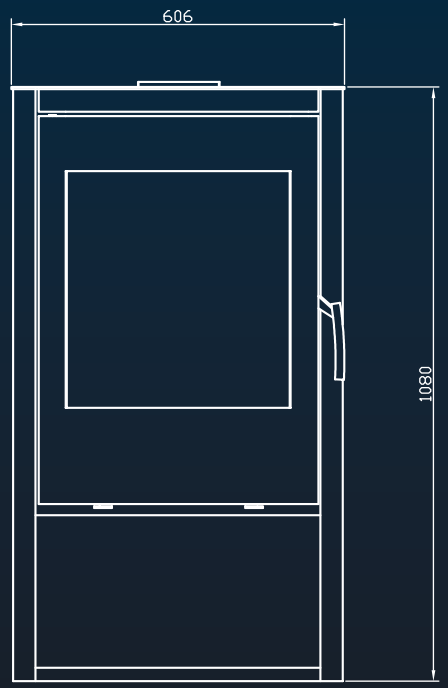

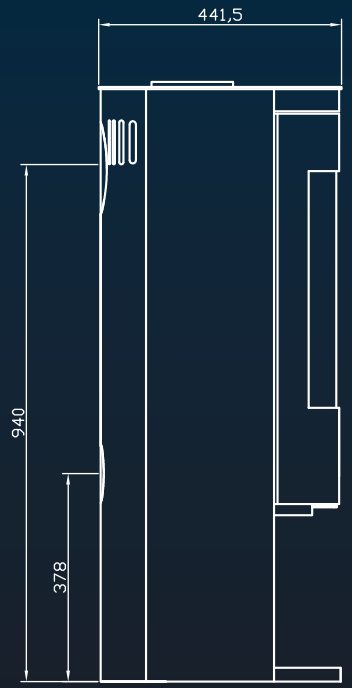

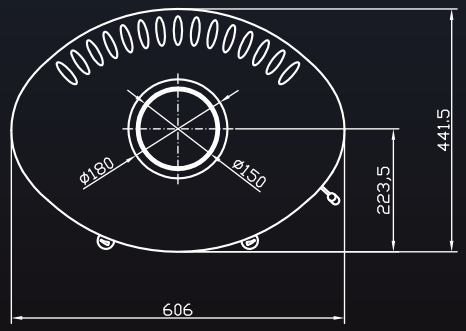

Nominal heating power:	7,0 kw
Room heating capacity:	40-120 m²
Weight:	140 kg
Distance to combustible materials:	Back 200mm/Side 200mm/ Front 1350mm
Efficiency:	80,8%
Fine dust:	< 34 mg/m³
Connection piece for Fresh Air:	intake Ø 100mm
Flue Pipe outlet diameter:	Ø150

D2 NEPTUN

- Cleaning of glass
- Fresh air connector
- Three points closing
- >80% Efficiency
- 7,0kW Heating power
- 35cm Dimension of wood logs

Black, Granit

GREY

Serpentino

Yellow Sandstone

Silver Steel Sides

Vapnenac

BLACK

Granit

Yellow Sandstone

Black Steel Sides

Vapnenac

TECHNICAL DATA

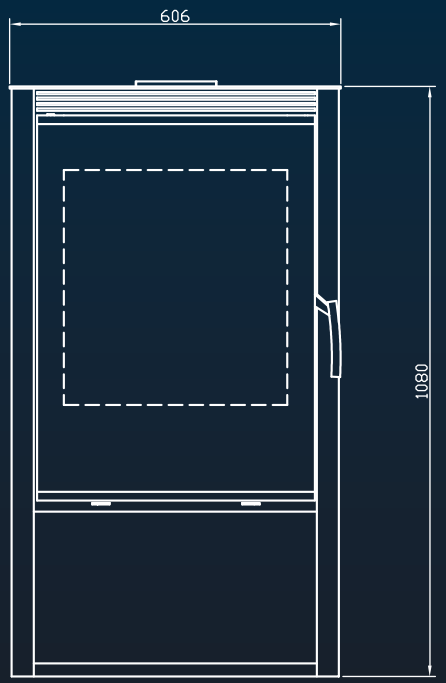

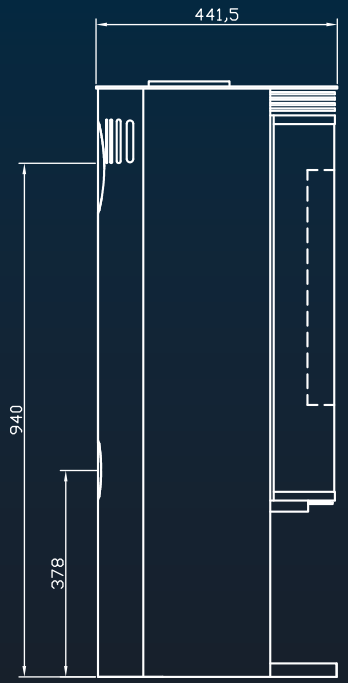

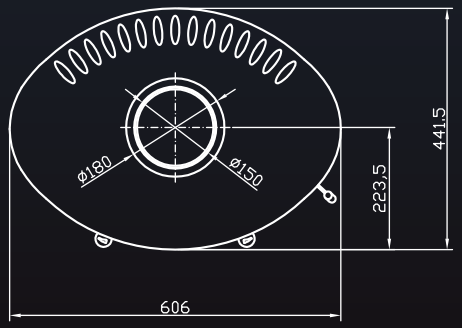

Nominal heating power:	7,0 kw
Room heating capacity:	40-120 m²
Weight:	140 kg
Distance to combustible materials:	Back 200mm/Side 200mm/ Front 1350mm
Efficiency:	80,8%
Fine dust:	< 34 mg/m³
Connection piece for Fresh Air:	intake Ø 100mm
Flue Pipe outlet diameter:	Ø150

D4 SOLO

- Cleaning of glass
- Fresh air connector
- Three points closing
- >78% Efficiency
- 7,0kW Heating power
- 35cm Dimension of wood logs

Grey, Serpentino

GREY

Grey Steel Sides

Yellow Sandstone

Granit

Vapnenac

BLACK

Granit

Yellow Sandstone

Black Steel Sides

Vapnenac

TECHNICAL DATA

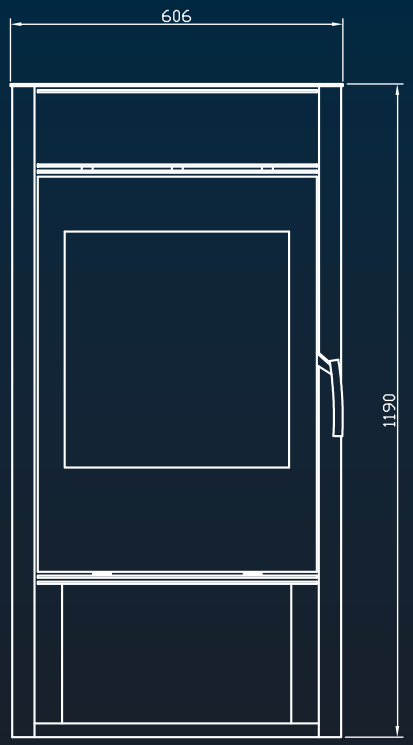

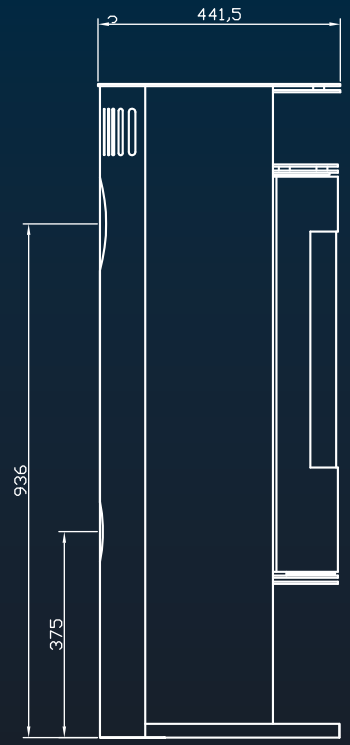

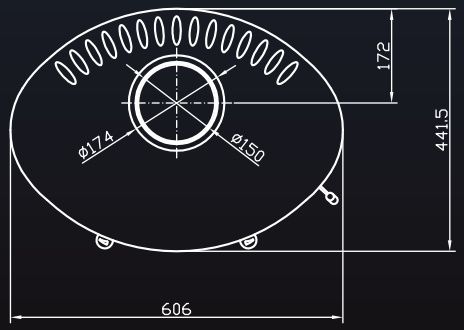

Nominal heating power:	7,0 kw
Room heating capacity:	40-120 m²
Weight:	140 kg
Distance to combustible materials:	Back 200mm/Side 200mm/ Front 1350mm
Efficiency:	78,4%
Fine dust:	< 24 mg/m³
Connection piece for Fresh Air:	intake Ø 100mm
Flue Pipe outlet diameter:	Ø150

D5 Solo SD

- Heat tank
- Cleaning of glass
- Fresh air connector
- Three points closing
- >78% Efficiency
- 7,0kW Heating power
- Dimension of wood logs

Grey, Serpentino

GREY

Grey Steel Sides

Yellow Sandstone

Granit

Vapnenac

BLACK

Granit

Yellow Sandstone

Serpentino

Vapnenac

TECHNICAL DATA

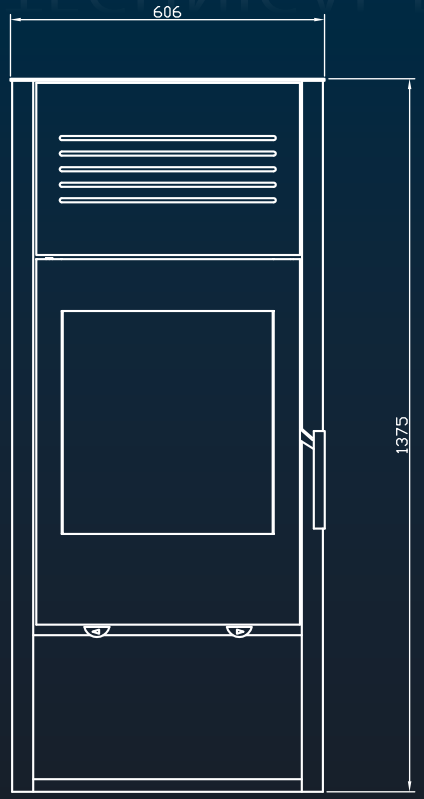

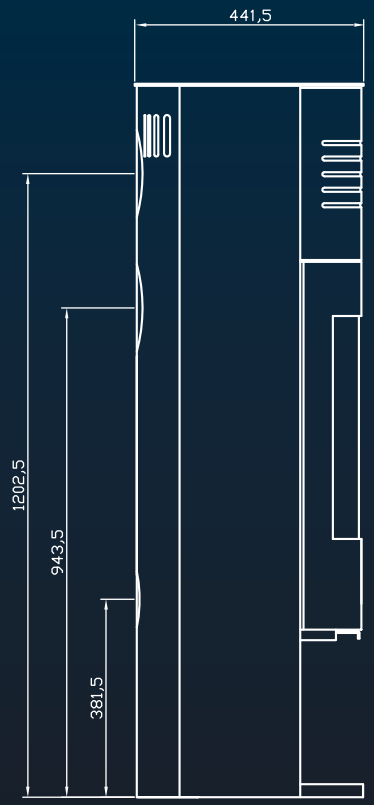

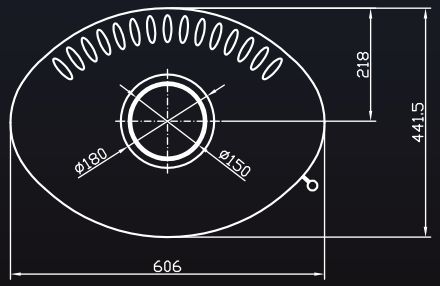

Nominal heating power:	7,0 kw
Room heating capacity:	40-120 m²
Weight:	155 kg
Distance to combustible materials:	Back 200mm/Side 200mm/ Front 1350mm
Efficiency:	78,4%
Fine dust:	< 24 mg/m³
Connection piece for Fresh Air:	intake Ø 100mm
Flue Pipe outlet diameter:	Ø150

D5 Solo FG

- Heat tank
- Cleaning of glass
- Fresh air connector
- Three points closing
- >78% Efficiency
- 7,0kW Heating power
- Dimension of wood logs

Black, Steel Sides

GREY

Serpentino

Yellow Sandstone

Grey Steel Sides

Vapnenac

BLACK

Granit

Yellow Sandstone

Serpentino

Vapnenac

TECHNICAL DATA

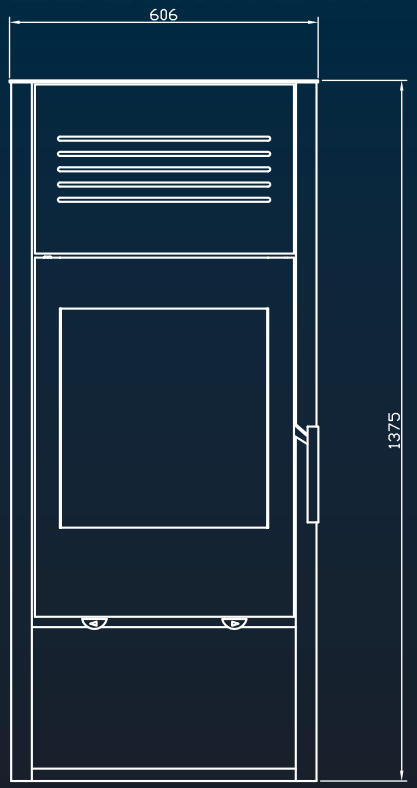

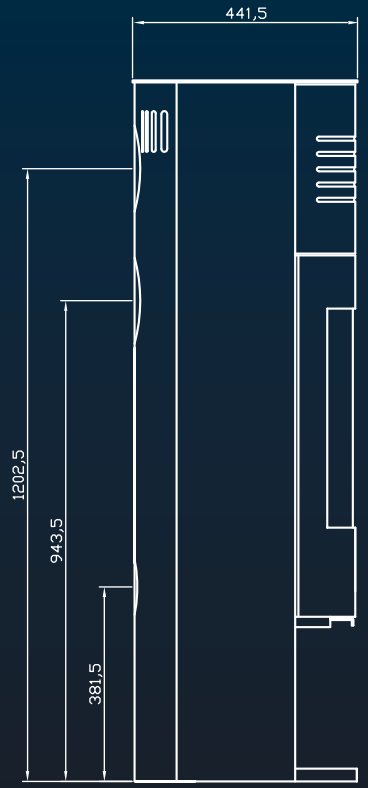

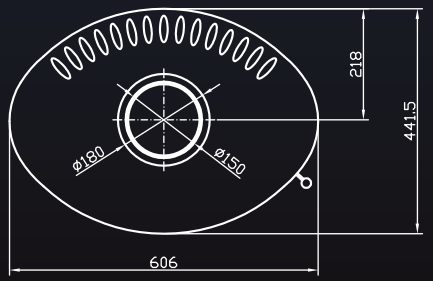

Nominal heating power:	7,0 kw
Room heating capacity:	40-120 m²
Weight:	155 kg
Distance to combustible materials:	Back 200mm/Side 200mm/ Front 1350mm
Efficiency:	78,4%
Fine dust:	< 24 mg/m³
Connection piece for Fresh Air:	intake Ø 100mm
Flue Pipe outlet diameter:	Ø150

D6 Solo SD

- Rotating
- Cleaning of glass
- Fresh air connector
- Three points closing
- Efficiency
- Heating power
- Dimension of wood logs

Black, Serpentino

GREY

Serpentino

Vapnenac

Grey Steel Sides

Granit

BLACK

Serpentino

Vapnenac

Black Steel Sides

Granit

TECHNICAL DATA

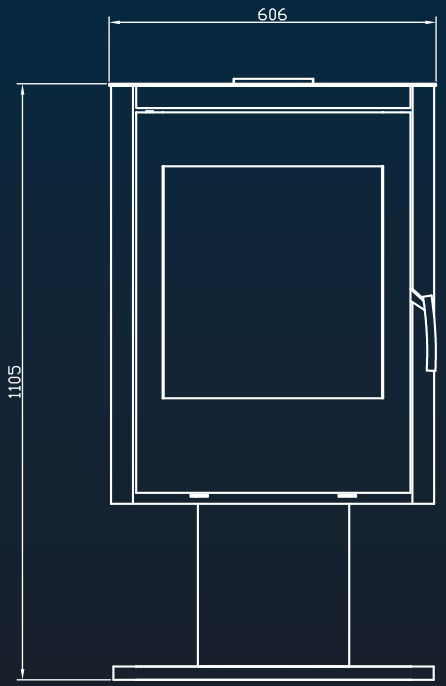

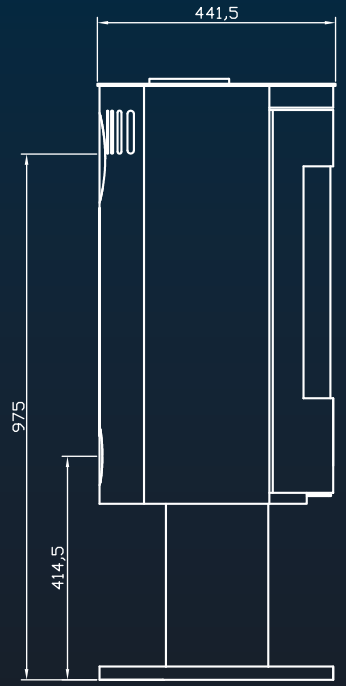

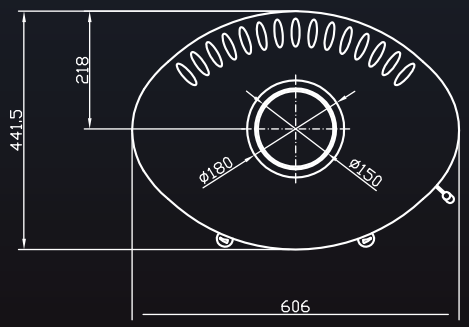

Nominal heating power:	7,0 kw
Room heating capacity:	40-120 m²
Weight:	132 kg
Distance to combustible materials:	Back 200mm/Side 1100mm/ Front 1100mm
Efficiency:	78,4%
Fine dust:	< 24 mg/m³
Connection piece for Fresh Air:	intake Ø 100mm
Flue Pipe outlet diameter:	Ø150

D6 Solo FG

- Rotating
- Cleaning of glass
- Fresh air connector
- Three points closing
- >78% Efficiency
- 7,0kW Heating power
- Dimension of wood logs

Black, Coto

GREY

Serpentino

Vapnenac

Grey Steel Sides

Granit

BLACK

Serpentino

Vapnenac

Black Steel Sides

Granit

TECHNICAL DATA

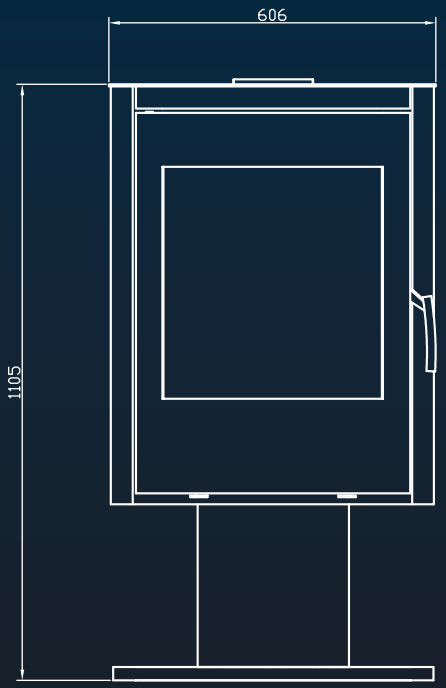

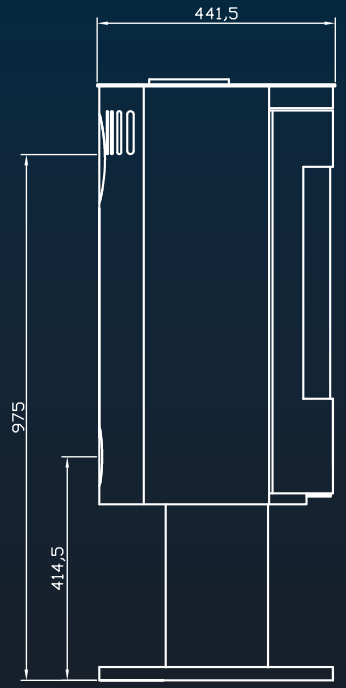

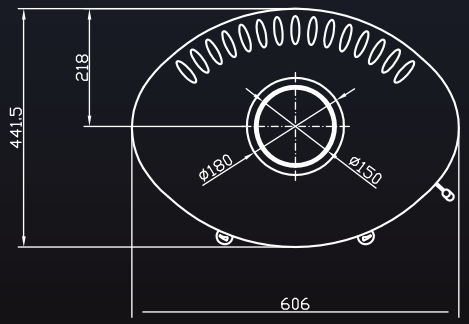

Nominal heating power:	7,0 kw
Room heating capacity:	40-120 m²
Weight:	132 kg
Distance to combustible materials:	Back 200mm/Side 1100mm/ Front 1100mm
Efficiency:	78,4%
Fine dust:	< 24 mg/m³
Connection piece for Fresh Air:	intake Ø 100mm
Flue Pipe outlet diameter:	Ø150

E WASSER

- Central Heating
- Fresh air connector
- Three points closing
- >83% Efficiency
- 8,3kW Heating power
- 35cm Dimension of wood logs

Grey, Steel Sides

GREY

Grey Steel Sides

Yellow Sandstone

Granit

Vapnenac

BLACK

Granit

Yellow Sandstone

Black Steel Sides

Vapnenac

TECHNICAL DATA

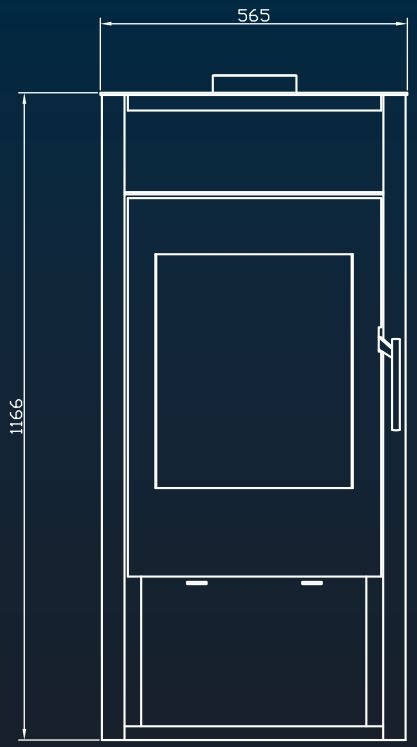

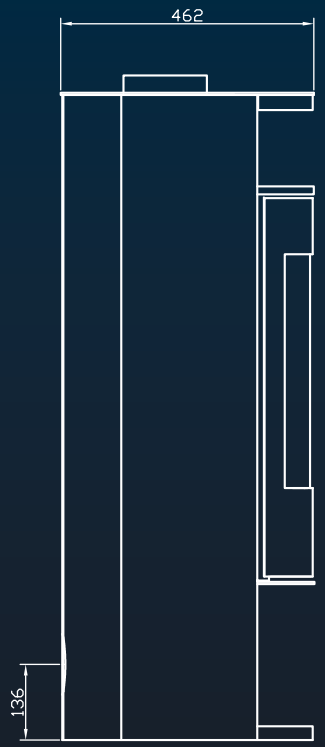

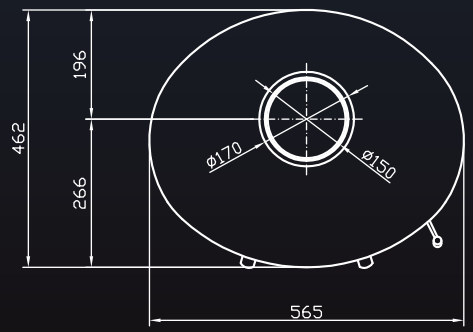

Nominal heating power:	8,3 kw
Room heating capacity:	40-140 m²
Weight:	160 kg
Distance to combustible materials:	Back 150mm/Side 200mm/ Front 800mm
Efficiency:	83,4%
Fine dust:	< 20 mg/m³
Connection piece for Fresh Air:	intake Ø 100mm
Flue Pipe outlet diameter:	Ø150

G1 Ronde SD

- Cleaning of glass
- Fresh air connector
- Self closing system
- >81% Efficiency
- 7,2kW Heating power
- 33cm Dimension of wood logs

Black, Steel Sides

GREY

Serpentino

Vapnenac

Silver Steel Sides

Yellow Sandstone

BLACK

Serpentino

Vapnenac

Black Steel Sides

Yellow Sandstone

TECHNICAL DATA

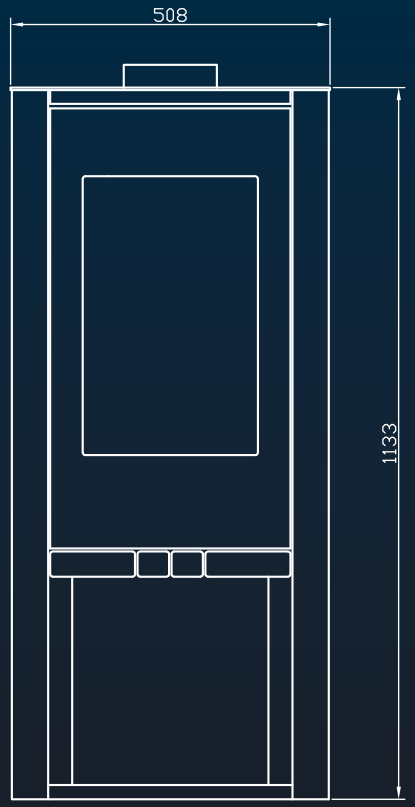

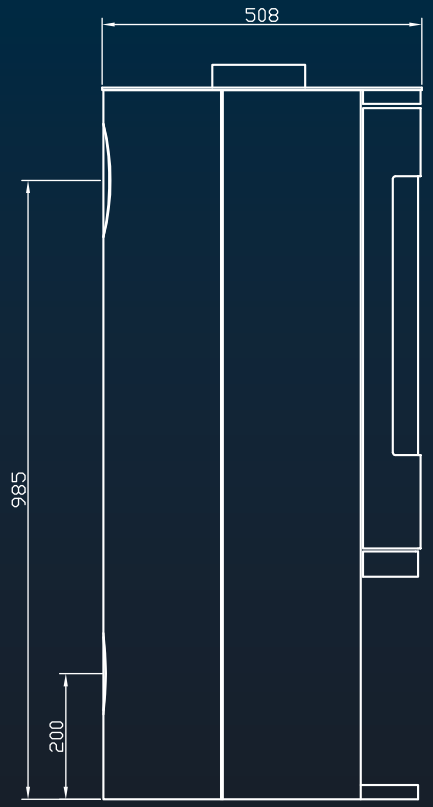

Nominal heating power:	7,2 kw
Room heating capacity:	40-120 m²
Weight:	130 kg
Distance to combustible materials:	Back 150mm/Side 250mm/ Front 900mm
Efficiency:	81,6%
Fine dust:	< 13 mg/m³
Connection piece for Fresh Air:	intake Ø 100mm
Flue Pipe outlet diameter:	Ø150

G1 MODA FG

- Cleaning of glass
- Fresh air connector
- Self closing system
- >81% Efficiency
- 7,2kW Heating power
- 33cm Dimension of wood logs

Black, Red

GREY

Serpentino

Vapnenac

Grey Steel Sides

Yellow Sandstone

BLACK

Serpentino

Vapnenac

Black Steel Sides

Yellow Sandstone

TECHNICAL DATA

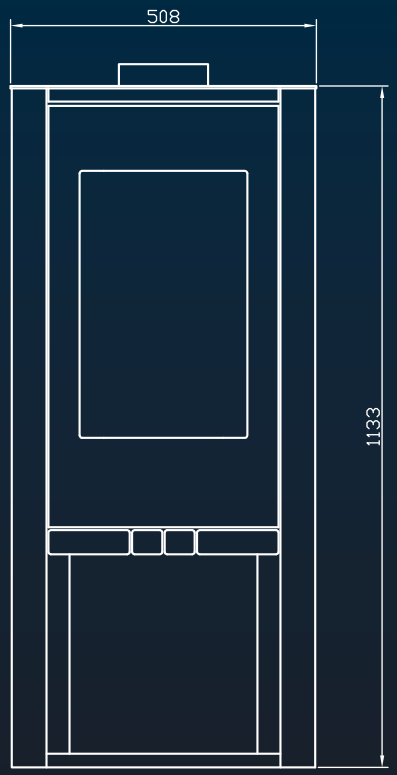

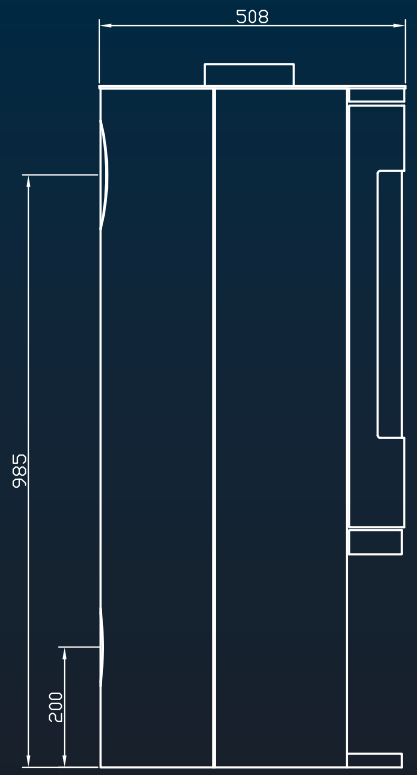

Nominal heating power:	7,2 kw
Room heating capacity:	40-120 m²
Weight:	132 kg
Distance to combustible materials:	Back 150mm/Side 250mm/ Front 900mm
Efficiency:	81,6%
Fine dust:	< 34 mg/m³
Connection piece for Fresh Air:	intake Ø 100mm
Flue Pipe outlet diameter:	Ø150

G2 Suprema SD

- Heat tank
- Cleaning of glass
- Fresh air connector
- Self closing system
- >81% Efficiency
- 8,2kW Heating power
- Dimension of wood logs

Black, Yellow Sandstone

GREY

Serpentino

Yellow Sandstone

Grey Steel Sides

Vapnenac

BLACK

Granit

Serpentino

Black Steel Sides

Vapnenac

TECHNICAL DATA

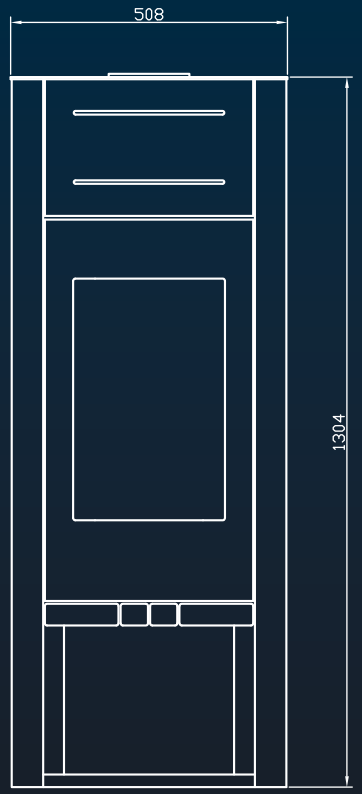

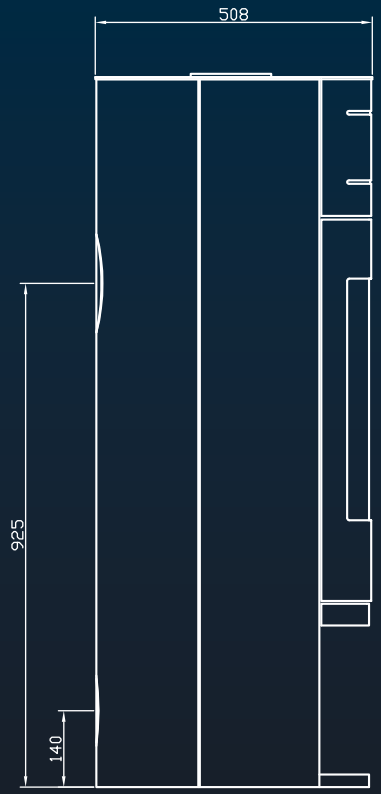

Nominal heating power:	8,2 kw
Room heating capacity:	40-140 m²
Weight:	138 kg
Distance to combustible materials:	Back 200mm/Side 200mm/ Front 800mm
Efficiency:	81,5%
Fine dust:	< 16 mg/m³
Connection piece for Fresh Air:	intake Ø 100mm
Flue Pipe outlet diameter:	Ø150

G2 Suprema FG

- Heat tank
- Cleaning of glass
- Fresh air connector
- Self closing system
- >81% Efficiency
- 8,2kW Heating power
- Dimension of wood logs

Black, Serpentino

GREY

Serpentino

Yellow Sandstone

Grey Steel Sides

Vapnenac

BLACK

Granit

Yellow Sandstone

Black Steel Sides

Vapnenac

TECHNICAL DATA

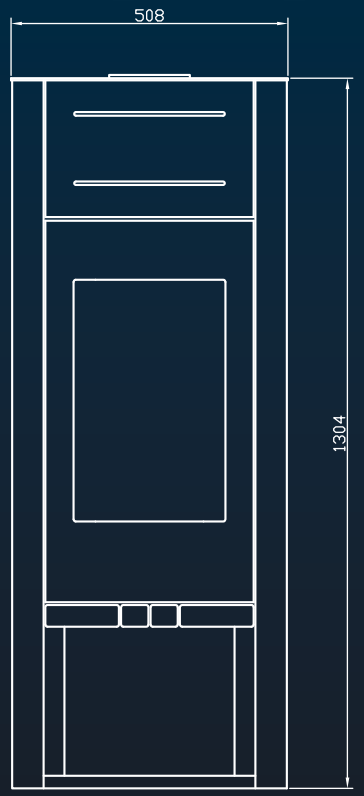

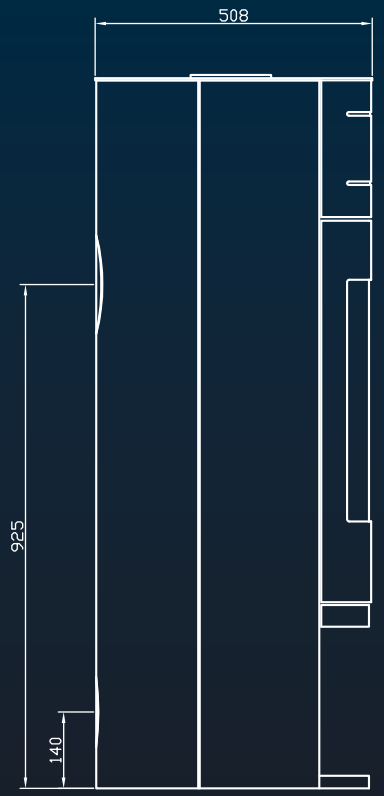

Nominal heating power:	8,2 kw
Room heating capacity:	40-140 m²
Weight:	140 kg
Distance to combustible materials:	Back 200mm/Side 200mm/ Front 800mm
Efficiency:	81,5%
Fine dust:	< 16 mg/m³
Connection piece for Fresh Air:	intake Ø 100mm
Flue Pipe outlet diameter:	Ø150

G3 Vitrum

- Cleaning of glass
- Fresh air connector
- Self closing system
- >78% Efficiency
- 6,4kW Heating power
- 33cm Dimension of wood logs

Black, Steel Sides

TECHNICAL DATA

Grey, Steel Sides

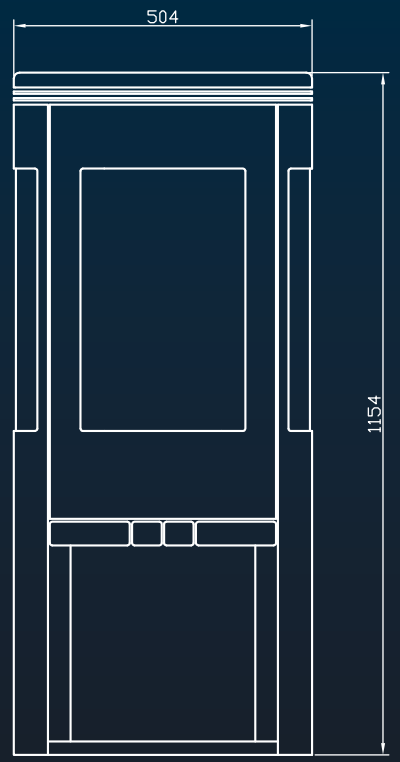

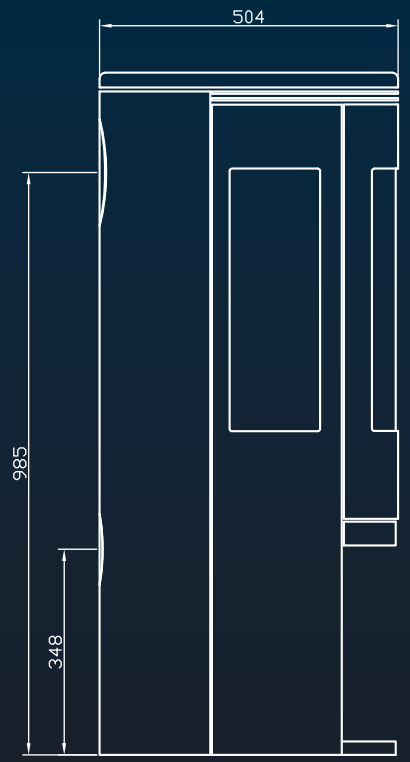

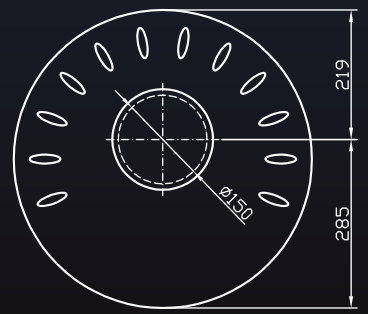

Nominal heating power:	6,4 kw
Room heating capacity:	40-120 m²
Weight:	128 kg
Distance to combustible materials:	Back 120mm/Side 640mm/ Front 800mm
Efficiency:	78,0%
Fine dust:	< 22 mg/m³
Connection piece for Fresh Air:	intake Ø 100mm
Flue Pipe outlet diameter:	Ø150

H1 Rustico SD

- Cleaning of glass
- Fresh air connector
- Three points closing
- >80% Efficiency
- 7,4kW Heating power
- 35cm Dimension of wood logs

Grey, Steel Sides

GREY

Serpentino

Yellow Sandstone

Silver Steel Sides

Vapnenac

BLACK

Serpentino

Yellow Sandstone

Black Steel Sides

Granit

TECHNICAL DATA

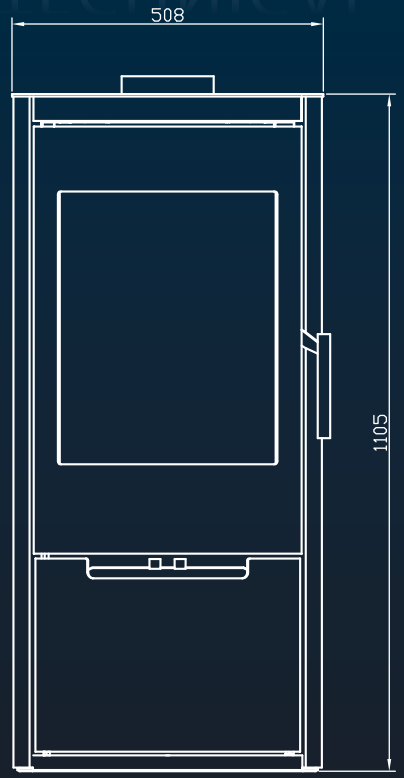

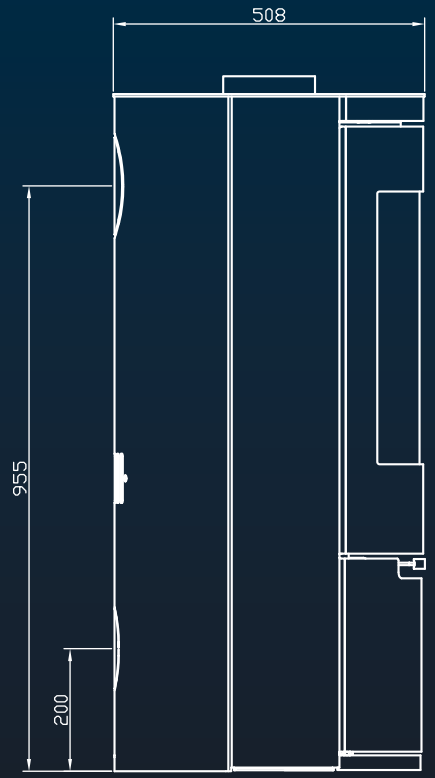

Nominal heating power:	7,4 kw
Room heating capacity:	40-120 m²
Weight:	105 kg
Distance to combustible materials:	Back 150mm/Side 150mm/ Front 800mm
Efficiency:	80,6%
Fine dust:	< 14 mg/m³
Connection piece for Fresh Air:	intake Ø 100mm
Flue Pipe outlet diameter:	Ø150

H1 Gato FG

- Cleaning of glass
- Fresh air connector
- Three points closing
- >80% Efficiency
- 7,4kW Heating power
- Dimension of wood logs

Black, Vapnenac

GREY

Serpentino

Yellow Sandstone

Silver Steel Sides

Vapnenac

BLACK

Serpentino

Yellow Sandstone

Black Steel Sides

Granit

TECHNICAL DATA

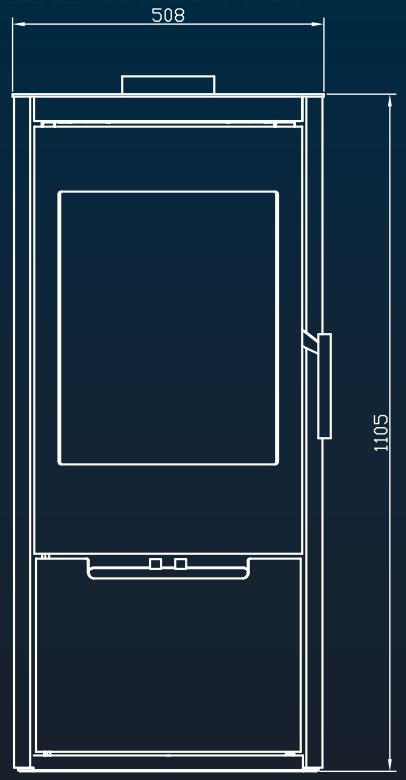

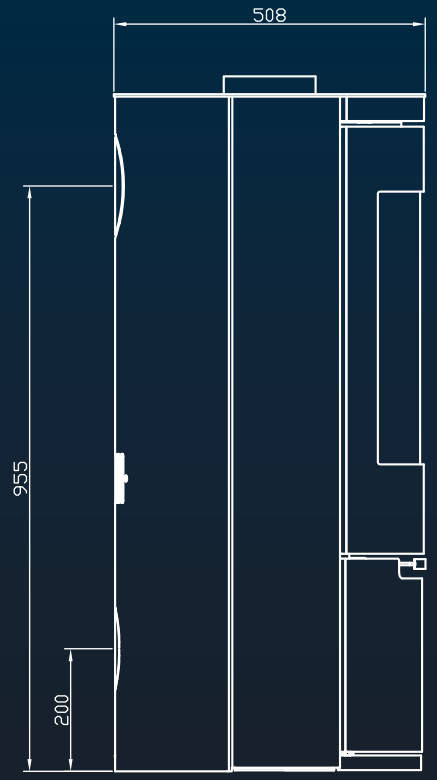

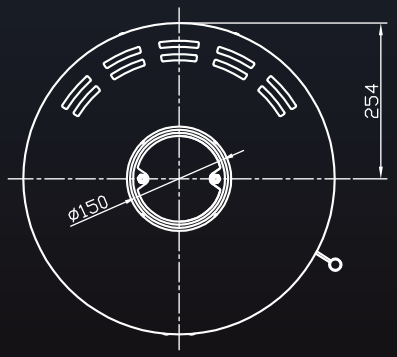

Nominal heating power:	7,4 kw
Room heating capacity:	40-120 m²
Weight:	106 kg
Distance to combustible materials:	Back 150mm/Side 150mm/ Front 800mm
Efficiency:	80,6%
Fine dust:	< 14 mg/m³
Connection piece for Fresh Air:	intake Ø 100mm
Flue Pipe outlet diameter:	Ø150

R1 Onyx

- Cleaning of glass
- Fresh air connector
- Three points closing
- >81% Efficiency
- 7,6kW Heating power
- 35cm Dimension of wood logs

Grey, Silver Sides

TECHNICAL DATA

Grey, Serpentino

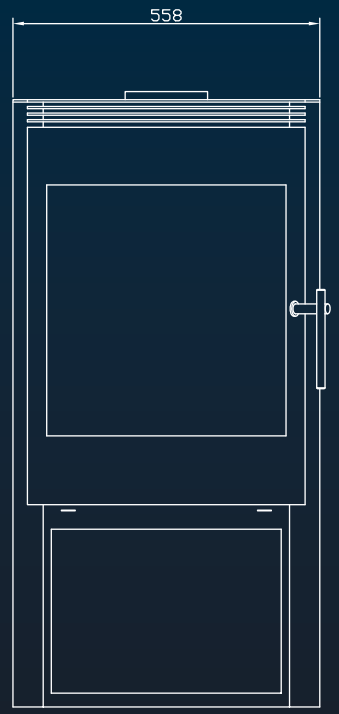

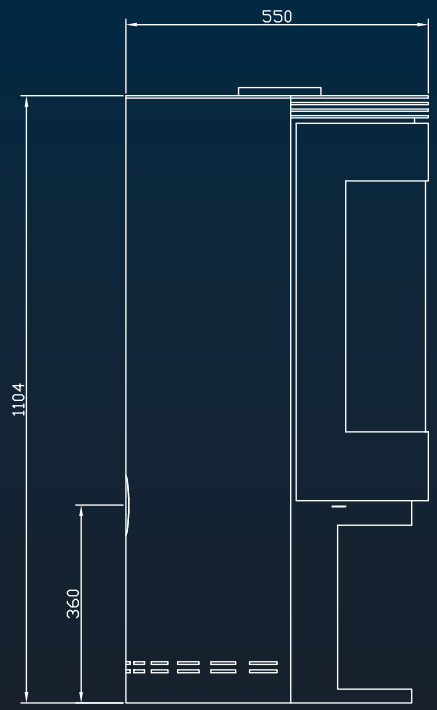

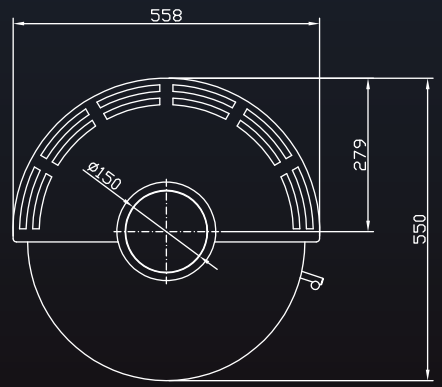

Nominal heating power:	7,4 kw
Room heating capacity:	40-120 m²
Weight:	150 kg
Distance to combustible materials:	Back 100mm/Side 200mm/ Front 800mm
Efficiency:	81,2%
Fine dust:	< 25 mg/m³
Connection piece for Fresh Air:	intake Ø 100mm
Flue Pipe outlet diameter:	Ø150

R3 Fenix

- Cleaning of glass
- Fresh air connector
- Three points closing
- >81% Efficiency
- 7,6kW Heating power
- 35cm Dimension of wood logs

Grey, Silver Sides

TECHNICAL DATA

Grey, Serpentino

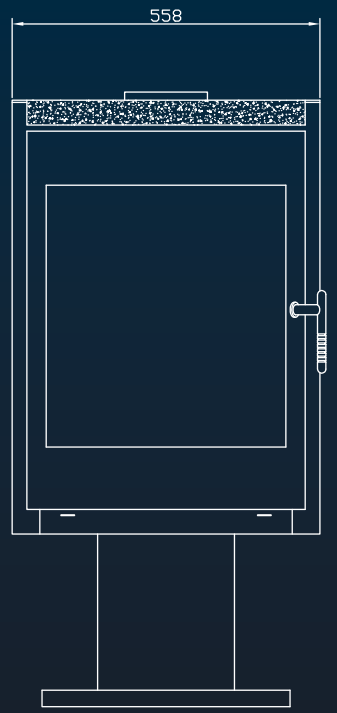

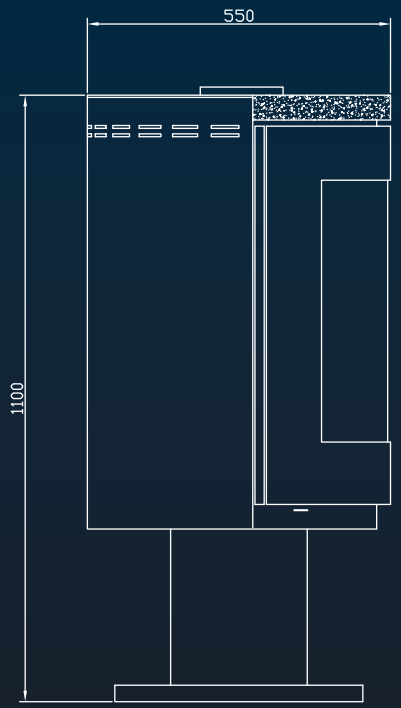

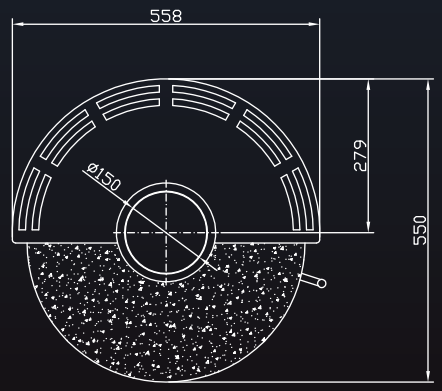

Nominal heating power:	7,4 kw
Room heating capacity:	40-120 m²
Weight:	150 kg
Distance to combustible materials:	Back 100mm/Side 800mm/ Front 800mm
Efficiency:	81,2%
Fine dust:	< 25 mg/m³
Connection piece for Fresh Air:	intake Ø 100mm
Flue Pipe outlet diameter:	Ø150

Color emajl d.o.o.
Alaginci 87A
HR - 34000 Požega
CROATIA
www.color.hr / team@color.hr

Color Fire GMBH
Brückenstr. 16
DE - 57629 Höchstenbach
GERMANY
www.color-emajl.eu / team@color.hr